Wiring Diagram For Model No. 33312 Blue LED Kit or Model No. 33313 White LED Kit

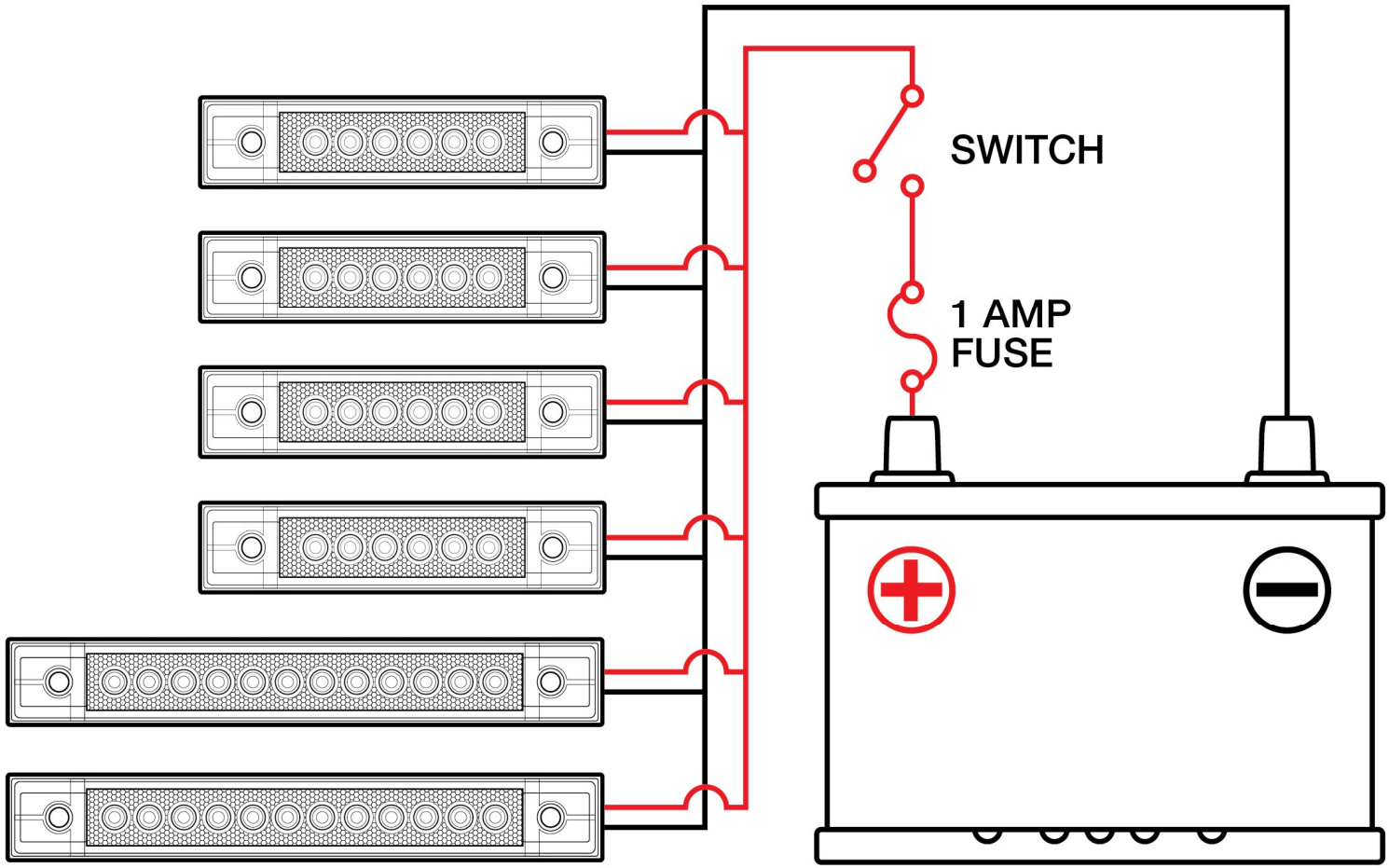

Additional wire may need to be added depending on the placement of your lights.